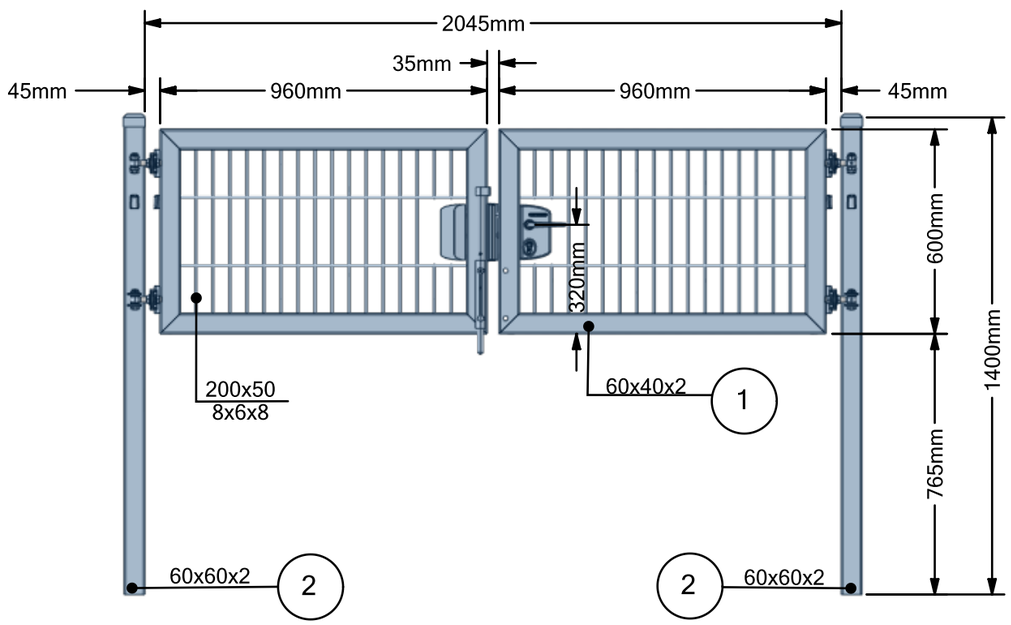

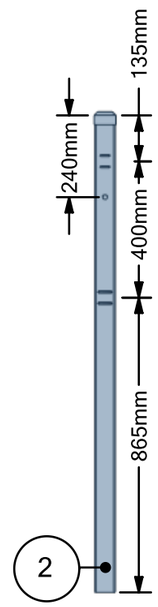

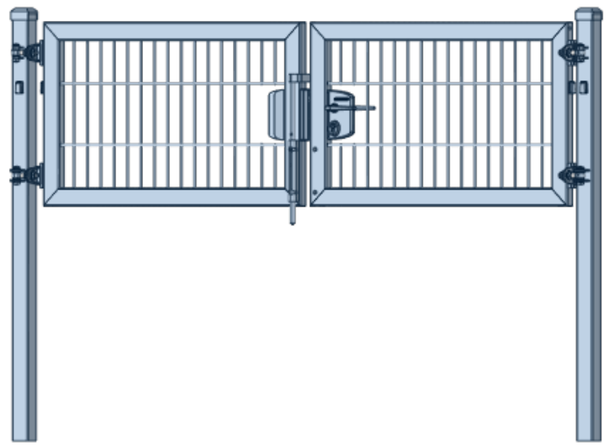

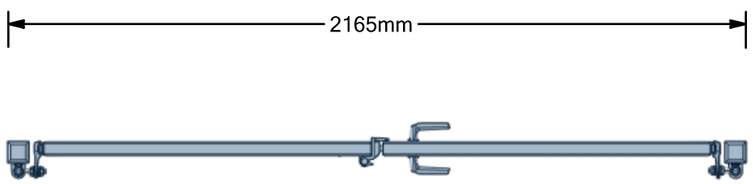

Part number:	Weight:	QTY:
1. PD100060.8		2
2. SCPP1406060.2		2

PPD200060.8

PORTUS
Omheind met kwaliteit

Drawing: Galvasteel

SIZE	CAGE CODE	DWG NO.	REV
A3			

SCALE 1:15 | SHEET 1 of 2